REV	ECN NO.	DESCRIPTION	DRN	APP'D	DATE

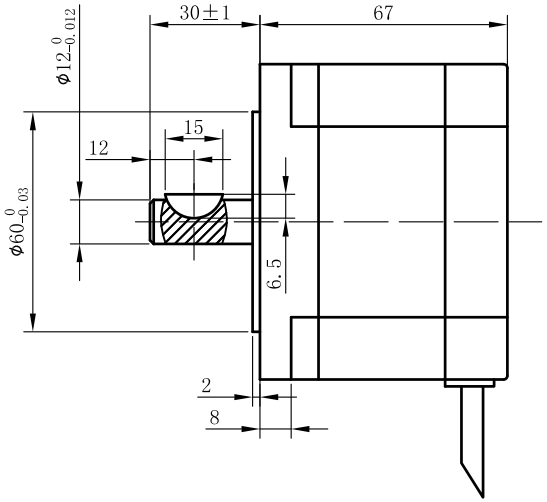

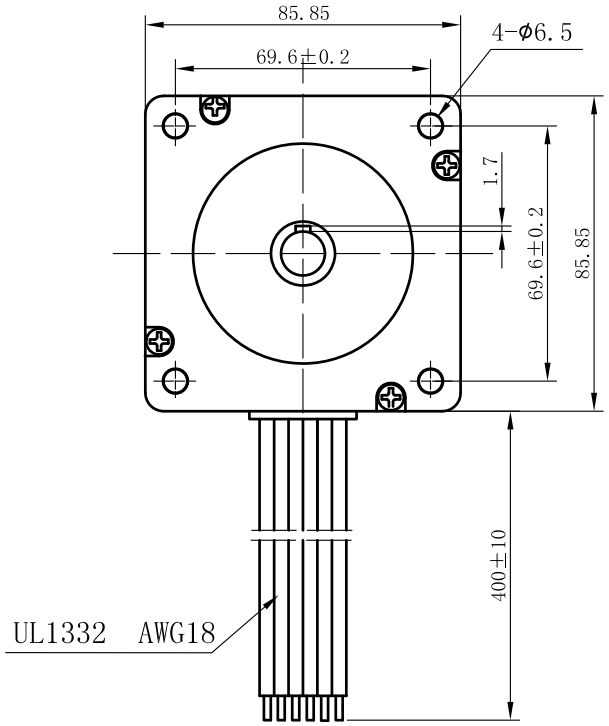

接线图(Wiring Diagram)

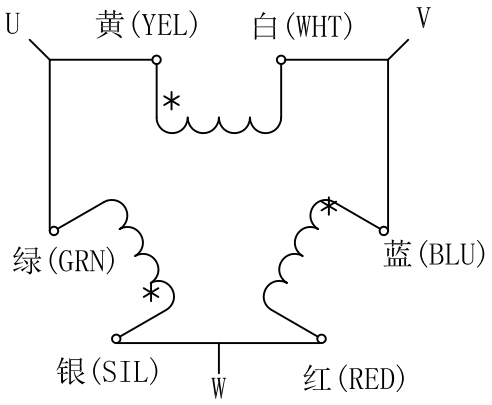

SPECIFICATION

STEP ANGLE	步距角	1.2°/full step(整步)
STEP ANGLE ACCURACY	步距角精度	±5%
NUMBER OF PHASE	绕组相数	3
RATED VOLTAGE	额定电压	7.4 VDC
RATED CURRENT	额定电流	1.75 A
RESISTANCE/PHASE	每相电阻	4.25±10% ohms@20°C
INDUCTANCE/PHASE	每相电感	11±20% mH@1kHz
HOLDING TORQUE	保持转矩	2.0 N.m
PULL OUT TORQUE	运行转矩	N.cm@ RPM
BACK EMF	反电动势	V @300RPM
DETENT TORQUE	定位转矩	0.08 N.m
ROTOR INERTIA	转子转动惯量	1120 g.cm²
WEIGHT	重量	1.65 Kg
TEMPERATURE RISE	温升	Less than 80K(小于80开)
SOURCE VOLTAGE	驱动器电压	N/A
INSULATION CLASS	绝缘等级	B 130°C
DIELECTRIC STRENGTH	介电强度	1200VAC/1S
INSULATION RESISITANCE	绝缘电阻	100MOhm @500VDC
IP CODE	防护等级	30
OPERATION AMBIENT	使用环境	Ambient temperature:-20...+50°C,humidity Max. 85%(No condensation)
STORAGE AMBIENT	存储环境	Ambient temperature:-20...+85°C,humidity Max. 85%(No condensation)

PERMISSIBLE RADIAL+AXIAL FORCE
(允许的轴向和径向力)

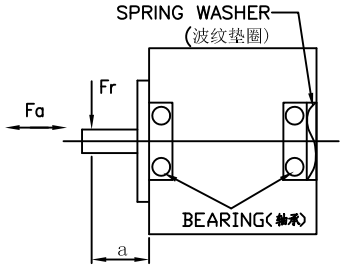

AXIAL-FORCE	轴向压力	Fa=60 N Max.
DISTANCE	距离	a=20 mm
RADIAL-FORCE	径向压力	Fr=220 N Max.
SHAFT RADIAL PLAY	径向间隙	0.025mm Max.@5N
SHAFT AXIAL PLAY	轴向间隙	0.08mm Max. @5N

UNLESS OTHERWISE SPECIFIED
TOLERANCES:
DECIMALS: ANGULAR:
.x ±0.5 ±0°30`
.xx ±0.25
.xxx ±0.1
UNIT: mm
DO NOT SCALE DRAWING

MATERIAL | CONTR. | DESIGN | DATE | CHECK | APPD

FIRST ANGLE PROJECTION

SCALE 1:2
SHEET OF

P/N. 3.1.01.086.XXXX
TITLE Specifications
USED ON FL863P67-01AW
DWG NO. REV A

FULLING MOTOR