| REV | ECN NO. | DESCRIPTION |
|---|---|---|
| | | |
| | | |
| | | |
| | | |

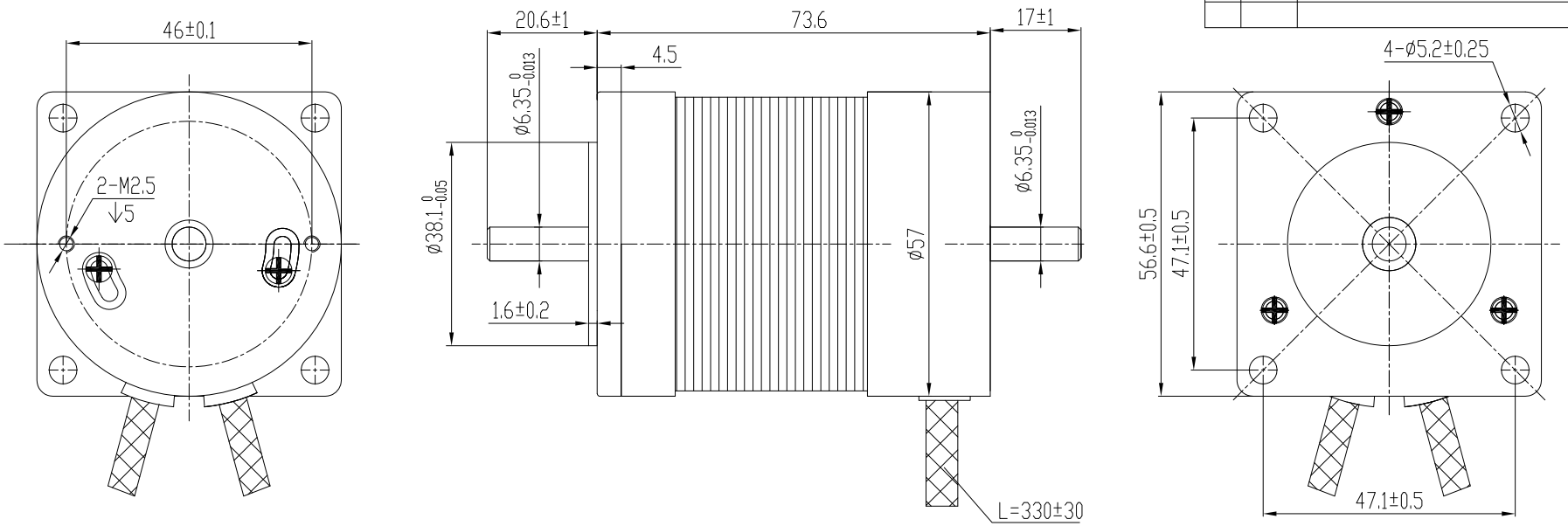


| | | | | | | | |
|---|---|---|---|---|---|---|---|
| NUMBER OF PHASE | 绕组相数 | 3 | Wires for Phases UL1430 AWG20 | | | | |
| NUMBER OF POLES | 极数 | 4 | PHASE U | PHASE V | PHASE W | | |
| LINE TO LINE RESISTANCE | 线电阻 | 0.64±10% ohms@20°C | YEL | RED | BLK | | |
| LINE TO LINE INDUCTANCE | 线电感 | 2±20% mH@1kHz | Wires for Hall UL1430 AWG26 | | | | |
| NOMINAL VOLTAGE | 额定电压 | 36 VDC | HALL Vc | Hu | Hv | Hw | HALL Gnd |
| NO LOAD SPEED | 空载转速 | 5400±10% RPM | RED | BLU | GRN | WHT | BLK |
| NO LOAD CURRENT | 空载电流 | < 0.5 A | | | | | |
| RATED TORQUE | 额定转矩 | 0.22N.m | | | | | |
| RATED SPEED | 额定转速 | 4000(1±10%) RPM | | | | | |
| RATED CURRENT | 额定电流 | 3.7A | | | | | |
| PEAK TORQUE | 峰值转矩 | 0.66 N.m | | | | | |
| PEAK CURRENT | 峰值电流 | 11.1 A | | | | | |
| BACK EMF CONSTANT | 反电势常数 | 4.45 Vrms/kRPM | | | | | |
| TORQUE CONSTANT | 转矩常数 | 0.06N.m/A | | | | | |
| INSULATION CLASS | 绝缘等级 | B 130°C | AXIAL-FORCE | 径向压力 | Fa=75 N Max. | | |
| DIELECTRIC STRENGTH | 介电强度 | 650VAC 1SEC | DISTANCE | 距离 | a=20 mm | | |
| INSULATION RESISITANCE | 绝缘电阻 | 100MOhm @500VDC | RADIAL-FORCE | 轴向压力 | Fr=15 N Max. | | |
| ROTOR INERTIA | 转子转动惯量 | 119g.cm² | SHAFT RADIAL PLAY | 径向间隙 | 0.025mm Max. @460g | | |
| WEIGHT | 重量 | 0.72 Kg | SHAFT AXIAL PLAY | 轴向间隙 | 0.025mm Max. @4000g | | |
| OPERATION AMBIENT | 使用环境 | Ambient temperature:-20...+55°C,humidity Max. 85%(No condensation) | | | | | |
| STORAGE AMBIENT | 存储环境 | Ambient temperature:-10...+35°C,humidity Max. 85%(No condensation) | | | | | |

PERMISSIBLE RADIAL+AXIAL FORCE

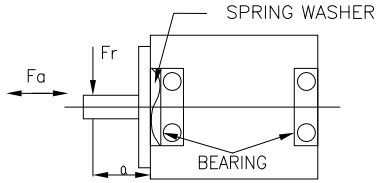


HALL CONNECTING

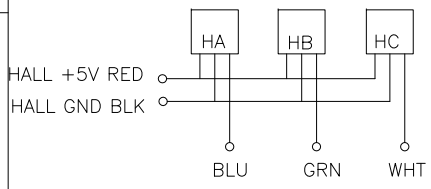


THREE-PHASE CONNECTING

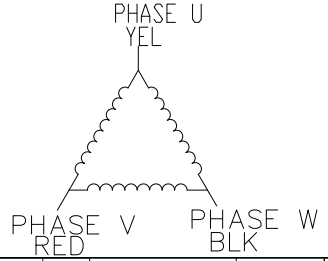


CW from shaft side

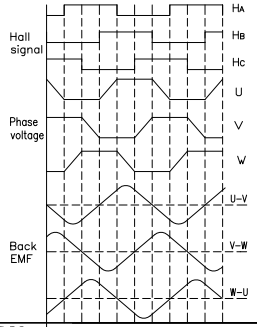


| | | | | | |
|---|---|---|---|---|---|
| UNLESS OTHERWISE SPECIFIED TOLERANCES: DECIMALS: .x ±0.5, .xx ±0.25, .xxx ±0.1; ANGULAR: ±0°30′; UNIT: mm; DO NOT SCALE DRAWING | MATERIAL | CONTR. | DESIGN / CHECK / APPD | DATE | P/N. 3.1.02.057.0130 |
| | | | | | TITLE Specifications |
| | | | | | USED ON FL57BLS02 |
| | | | | | DWG NO. / REV |
| | FIRST ANGLE PROJECTION | | SCALE N.T.S | | FULLING MOTOR |
| | | | SHEET 1 OF 1 | | |